Lumistar luminaires stainless steel USL 13 and USL 33 and UL-listed types

USL 13: for general applications, mounted with hinged bracket
USL 33: special variant for sterile environments with adapter collar for fitting over flanges, etc.

- **For mounting on sight glass fittings:**
  This sight glass luminaire is designed for universal applications. It is ideal for use in combined sight and light ports (single-flange version) or for two separate ports (2-flange version).

- **Compact design, powerful light output:**
  Glare-free illumination; suitable for circular sight glass fittings to DIN 28120/DIN 28121 or similar, for screw-type sight glass fittings in compliance with DIN 11851, and for METAGLAS® and BioControl fittings.

- **Application in chemical, pharmaceutical, biogas and food processing industries:**
  It is ideal for illuminating bioreactors, laboratory mixers and filters as well as the interiors of tanks, agitators, separators, pipelines and other, usually closed, vessels in **non-explosive operating environments.**

- **Protection class:** Dust- and waterjet proof, IP 65 according to EN 60 529 / DIN VDE 0470, Part 1

- **Operating conditions:**
  Independent of the internal pressure/vacuum in the vessel. Under no circumstances should a sight glass luminaire be used on its own to close a vessel port or as a replacement for the mating flange or the complete sight glass flange assembly.

- **Max. admissible ambient temperature at the cable entry gland with halogen version: 90°C; with LED version: 40°C.**

- **Very easy to install using special mountings, ensuring convenience of use:**
  USL 13: The luminaire is attached to the mating flange of the circular sight glass fitting or the visual flow indicator with a hinged bracket, or fastened to the grooved nut on screw-type sight glass fittings.
  USL 33: The luminaire is mounted over an adapter collar.

  Caution: Do not look into light – Danger of impaired eyesight!

  Lumistar luminaire USL 13 and USL 33 fit the following sizes:
  a) Circular sight glass fitting acc. to DIN 28120: from DN 25
  b) Circular sight glass fitting acc. to DIN 28121: from DN 40
  c) Visual flow indicators: from DN 25
  d) Screw-type sight glass fittings in compliance with DIN 11851: from DN 50

- **Voltage type:** AC/DC
  Operating voltage: 12 V, 24 V, 120 V, 230 V
  Wattage: up to 50 W, depending on operating voltage

- **Transformers:**
  Transformers for 12 V or 24 V secondary voltage can be supplied on request.

- **Push-button:**
  50-watt luminaires should only be operated by push-button (not in continuous mode). Should an integrated push-button not be included in the order/scope of supply, it is essential for an external momentary-contact push-button or a timer to be installed in the power supply line, outside the luminaire! Under no circumstances should the maximum temperatures specified for the luminaire be exceeded.

- **Mounting parts for USL 13:**
  The luminaire mounting (hinged bracket) is included in the scope of supply. The flange collar for mounting on screw-type sight glass fittings of DN 50/65 and greater should be ordered separately.

CE

3755.199 c

Lumistar luminaire USL 13 with hinged bracket mounting

Lumistar luminaire USL 33

F.H.Papenmeier GmbH & Co. KG · division Lumiglas
Talweg 2 · 58239 Schwerte · Germany
phone: +49-2304 205-0 · fax: +49-2304 205-206
info.lumi@papenmeier.de · www.lumiglas.de

PAPENMEIER

Lumiglas

• Dimensions and electrical data for Lumistar luminaires USL 13 and USL 33 and UL-listed types:

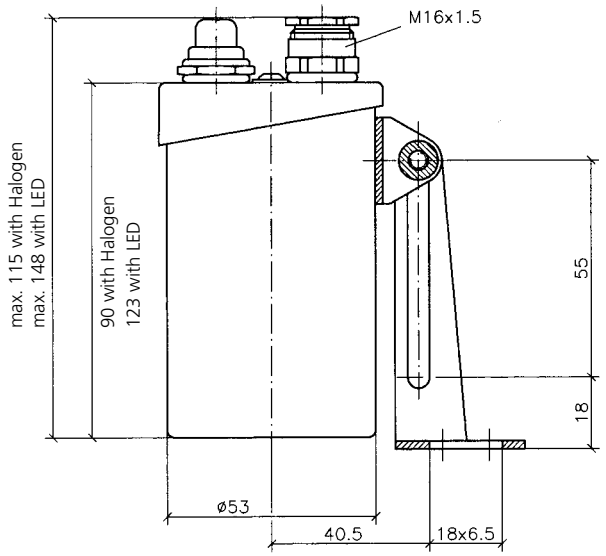

USL 13 with hinged bracket

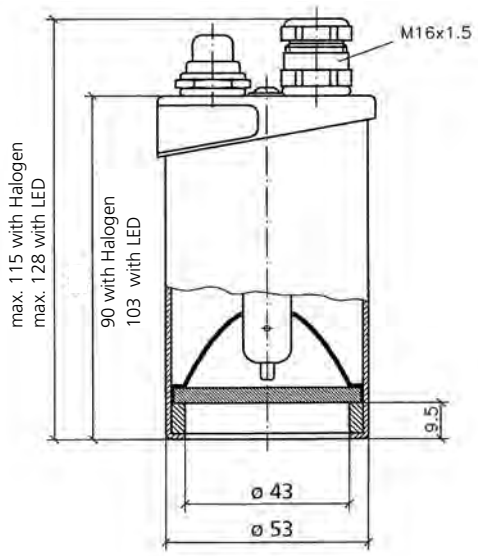

USL 33 with flange collar

• Components and materials:

- Luminaire body and cover: Stainless steel 1.4404
- Hinged bracket and flange collar for attachment to screw-type sight glass fitting DN 50/65): Stainless steel 1.4301
- Connecting cable: 3 m (3 x 0.75 mm²) works fitted
- Weight: 0.58 kg

• Connection data (further versions on request):

Item	Type USL 13/33	Nominal Voltage V	Push-button	Trans-former	Socket	USL 13 Part. no.	USL 33 Part. no.	USL 13-UL Part. no.	USL 33-UL Part. no.
1	(12 V) **20 W**	12 ≃	with	without	GY6.35	3540.206.00	3540.341.00	–	–
2	(12 V) **20 W**	12 ≃	without	without	GY6.35	3540.207.00	3540.342.00	–	–
3	(24 V) **20 W**	24 ≃	with	without	G4	3540.208.00	3540.223.00	3540.441.00	3540.443.00
4	(24 V) **20 W**	24 ≃	without	without	G4	3540.209.00	3540.224.00	3540.442.00	3540.444.00
5	(120 V) **20 W**	120 ≃	with	without	GY6.35	3540.210.00	3540.212.00	–	–
6	(120 V) **20 W**	120 ≃	without	without	GY6.35	3540.211.00	3540.21300	–	–
7	(120 V) **20 W**	120 ≃	with	without	BA15d	–	–	3540.593.00	3540.595.00
8	(120 V) **20 W**	120 ≃	without	without	BA15d	–	–	3540.594.00	3540.596.00
9	(230 V) **20 W**	230 ≃	with	without	G9	3540.277.00	–	–	–
10	(12 V) **50 W**	12 ≃	with	without	GY6.35	3540.215.00	3540.216.00	–	–
11	(24 V) **50 W**	24 ≃	with	without	GY6.35	3540.217.00	3540.218.00	3540.975.00	3540.977.00
12	(120 V) **50 W**	120 ≃	with	without	BA15d	–	–	3540.685.00	3540.687.00
13	(120 V) **50 W**	120 ≃	with	without	GY6.35	3540.219.00	3540.221.00	–	–
14	(120 V) **50 W**	120 ≃	without	without	GY6.35	3540.220.00	3540.222.00	–	–
	LED Versions								
15	(24 V) **2 W**	24 ≃	with	coverter	GU4	3541.414.00	3541.416.00	–	–
16	(24 V) **2 W**	24 ≃	without	converter	GU4	3541.415.00	3541.417.00	–	–
17	(24 V) **2 W**	24 ≃	with switch			3541.410.00	3541.412.00	–	–

• Accessories (for USL 13 only):

Item	Luminaire mounting	Part no.
1	Flange collar DN 50, stainless steel (no hinged mounting bracket required)	1356.000004
2	Flange collar DN 65, stainless steel (no hinged mounting bracket required)	1356.030.00

• **Order data:** e. g. Lumistar luminaire USL 13, 24 V/20 W, with push-button, part no. 3540.208.00

All dimensions in mm unless stated otherwise. Subject to change without prior notice. 06.17

PAPENMEIER

F.H.Papenmeier GmbH & Co. KG · division Lumiglas
Talweg 2 · 58239 Schwerte · Germany
phone: +49-2304 205-0 · fax: +49-2304 205-206
info.lumi@papenmeier.de · www.lumiglas.de